Claus waste heat boiler economics Part 2: mechanical considerations

The design of a cost effective waste heat boiler faces many, often opposing factors affecting the performance and reliability of the exchanger

NATHAN A HATCHER, CLAYTON E JONES, SIMON A WEILAND, STEVEN M FULK and MATTHEW D BAILEY
Optimized Gas Treating, Inc.

The Claus waste heat boiler (WHB) runs under quite harsh operating conditions, has serious reliability challenges, and is one of the most fragile equipment items in the sulphur recovery unit (SRU). It not only provides heat recovery from the thermal section, but it also affects the unit's hydrogen balance and COS levels through recombination reactions.

Part 1 of this two-part series (see *PTQ*, Q1 2019) discussed general process considerations including the effects of tube length, pressure drop, and COS/H_2 reactions on sulphur recovery. One of the main concerns was exothermic recombination reactions and how they affect SRU performance in terms of hydrogen make, COS creation, and sulphur recovery:

$H_2 + ½ S_2 \rightleftharpoons H_2S$
$CO + ½ S_2 \rightleftharpoons COS$

Flow rate and composition of AAG and SWAG feed streams

	Amine AG + TGU recycle	SWS AG
Flow rate, std. m^3/h	140	26
H_2S mol%	88.2	33.1
CO_2 mol%	6.4	–
NH_3 mol%	–	40.9

Table 1

Part 2 focuses on determining the heat flux and tube wall temperature profiles along the length of the boiler. This is aimed at understanding the particularly important area near the critical tube-to-tubesheet joint where WHB mechanical failures frequently occur. Also relevant are boiler tube corrosion rates and subsequent boiler failure together with the cost of its mitigation. The recombination reactions are exothermic. They increase both the process fluid and tube wall temperatures, as do the species shifting between the S_2, S_6 and S_8 allotropes of sulphur. Radiative heat transfer coupled with the exothermic recombination reactions collectively increase the peak heat flux at the front of the boiler well above predictions from models that ignore or discount some (or all) of these factors.[1] Greatly elevated tube wall temperatures well downstream of the area of protection provided by ceramic ferrules for the higher mass velocity cases is demonstrated, lending theoretical support to documented failures in the industry. In this article, tube wall temperatures, and heat flux predictions from the model are examined down the length of the tubes along with the implications of sulphidic corrosion and the resulting effect on

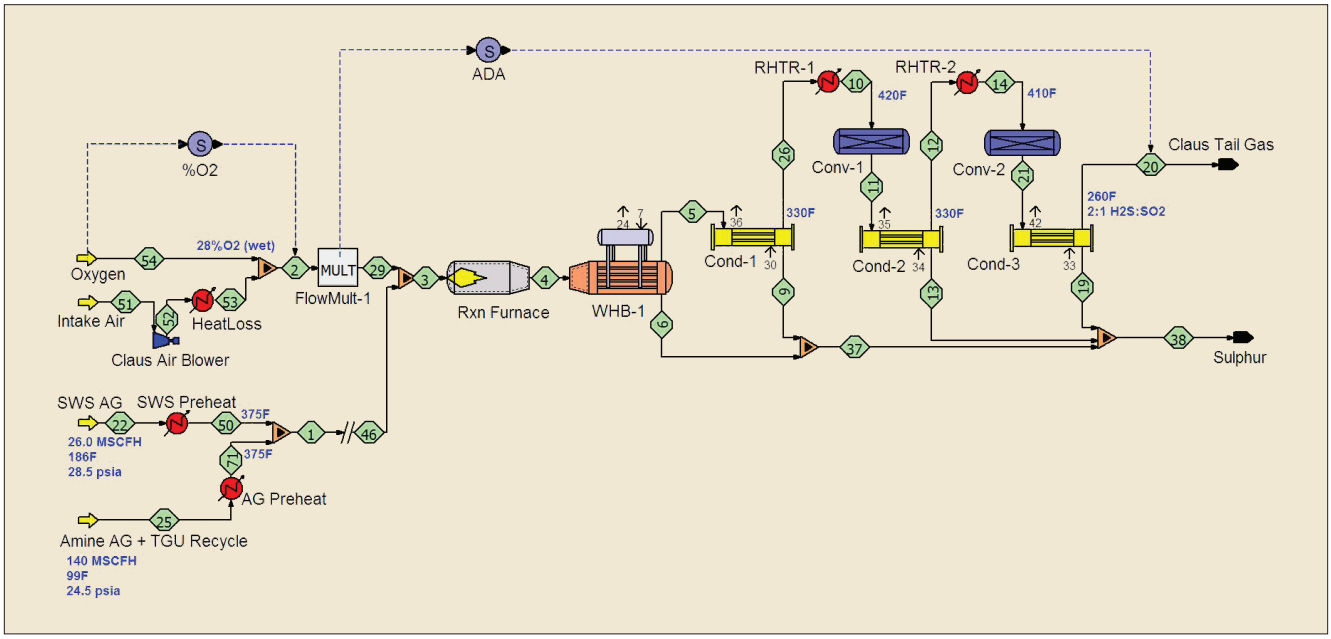

Figure 1 Case study sulphur recovery unit flowsheet

Design parameters	
Parameter	
Outside convective heat transfer coefficient, Btu/h·ft²·°F	150
Emissivity for radiative heat transfer, unitless	0.9
Inside fouling resistance, h·ft²·°F/Btu	0.008
Outside fouling resistance, h·ft²·°F/Btu	0.002
Tube material	Carbon steel
Tube wall thickness, inches	0.1085

Table 2

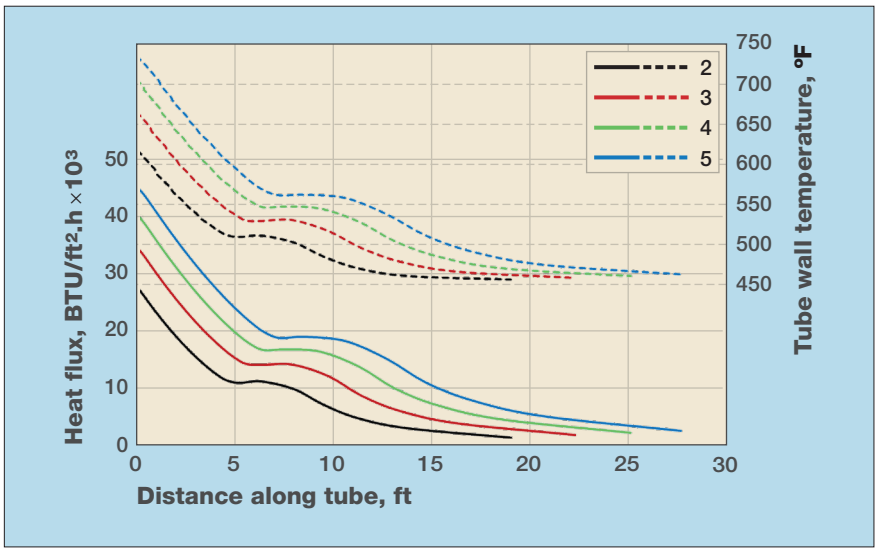

Figure 2 Heat flux (solid lines) and tube wall temperature (dashed lines) profiles along 1.5in OD boiler tubes with mass flux (lb/ft²·h) as parameter

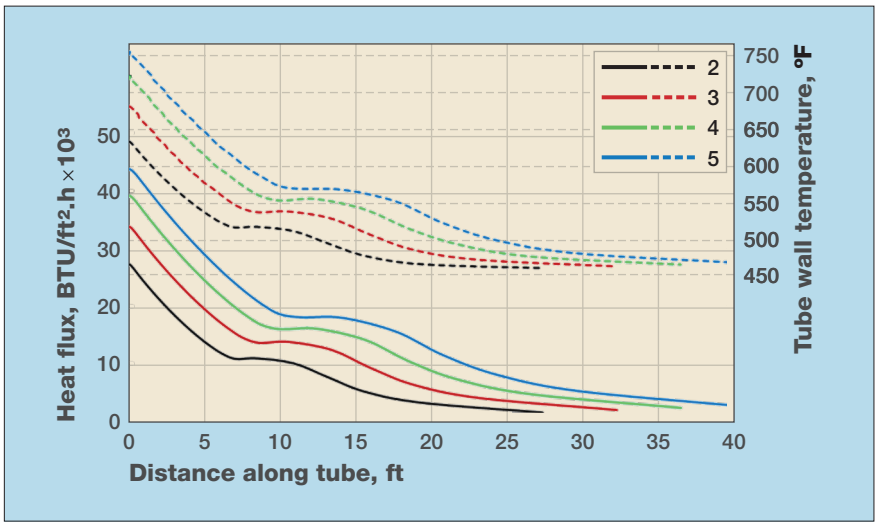

Figure 3 Heat flux (solid lines) and tube wall temperature (dashed lines) profiles along 2in OD boiler tubes with mass flux (lb/ft²·h) as parameter

boiler tube life and SRU reliability economics examined with this new information.

Case study

The following case study is a continuation from Part 1 and is a typical 125 lt/d sulphur plant (see **Figure 1**) with two converter stages processing both amine acid gas (AAG) and sour water acid gas (SWAG). **Table 1** shows the conditions of these two acid gas feed streams. The WHB was sized in Part 1 by fixing the process-side mass flux, the tube size, and the process outlet temperature. The tube count and tube length were adjusted to meet target specifications. The results were obtained using the kinetic heat transfer and chemical reaction rate based SulphurPro SRU simulator within ProTreat Version 6.4.

Table 2 shows values for other design parameters assumed for this application of the model. The boiler produces 350 psig saturated steam from preheated boiler feed water.

Heat flux, tube wall temperature, and corrosion implications

Heat flux is a very important factor in the reliability, life cycle cost, and the safe long term operation of the WHB. Heat flux varies greatly along the tube length; it is highest at the process inlet and decreases as the process gas cools. In terms of reliability, it is our experience that failures tend to become more common with heat fluxes exceeding 50 000 Btu/ft²·h. At elevated heat flux, problems with steam blanketing on the utility side are more common. Locally high heat flux values can result in local steam blanketing which, in turn, can result in locally higher tube wall temperatures and increased corrosion rates. A host of other factors such as tube pitch and orientation also play into the likelihood of steam blanketing; these are discussed elsewhere.[2] The life cycle cost of a WHB depends greatly on the corrosion rate of the boiler tubes caused by high heat flux and high tube wall temperatures. Tube wall temperature together with the concentration of H_2S present correlate directly with the sulphidic corrosion rate.[2] **Figures 2**, **3** and **4** show the heat flux and tube wall temperature profiles along the length of the exchanger tubes for 1.5in, 2in, and 3in diameter tubes, over a range of mass fluxes. Tube lengths have been determined so that the process gas just reaches 550°F (288°C) at the exit from the tubes.

Each curve shows a wave approximately one-third of the way along the boiler tubes. This is caused by the sulphur species shifting from S_2 to S_6 and S_8 (sulphur redistribution), which are exothermic polymerisation reactions. Note that the heat flux considered here does not account for thermal protection provided by ferrules or for the enhanced heat transfer effect of eddies at the ferrule exits. Eddies

in the process gas flow as it exits the ferrules can cause the heat flux to be amplified several times for a short distance.[2] As the mass velocity is increased at a constant boiler tube size, the peak heat flux and tube wall temperature both increase at the front of the tubes. This is where almost all failures from sulphidic corrosion occur. Tube wall temperature ties directly into the sulphidic corrosion rate. As the mass flux through the boiler tubes increases, the tube wall temperature increases by approximately 130°F (72°C), which translates directly into higher sulphidic corrosion rates.

The predicted corrosion rates shown in **Figure 5** for two mass fluxes in a 2in tube were determined from our digital correlation of the well-known Couper-Gorman curves, reproduced from the correlation here as **Figure 6**.

At constant mass flux, **Figures 2-4** show that larger boiler tubes tend to produce higher tube wall temperatures. Corrosion concerns tend to increase at tube wall temperatures greater than 600-650°F (315-343°C). For this study, the tube-wall temperature at the front of the boiler tubes is generally approaching this temperature range for mass fluxes between 2 and 3 lb/ft²·s. The service life of the exchanger is directly determined by the corrosion rate, and the life cycle cost is a strong function of service life.

Looking at how sulphidic corrosion occurs through the length of the exchanger, the higher mass flux case has significant corrosion rates through the first five feet or so of the tubes. **Figure 5** shows how the corrosion trends through a 2in outside diameter tube at 2 and 5 lb/ft²·s mass flux. The corrosion rate increases by almost a factor of four at the higher mass flux.

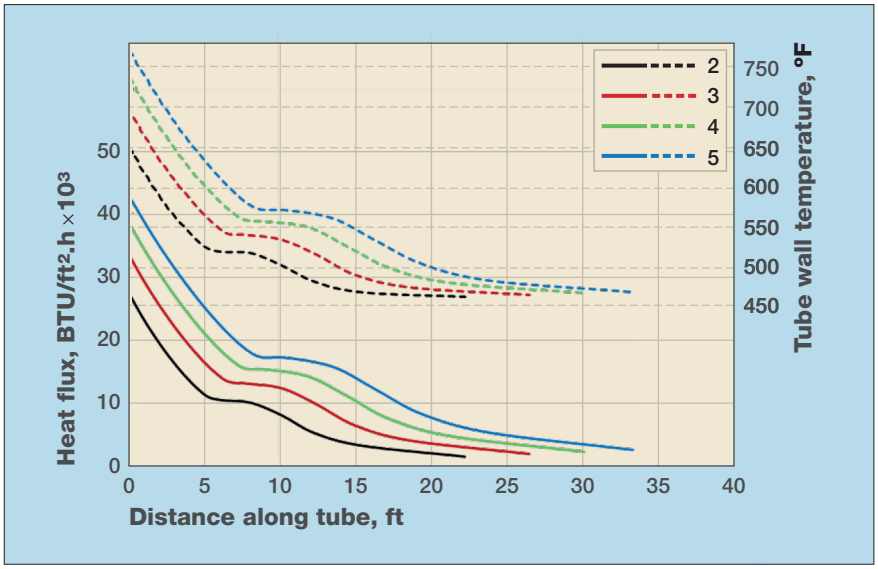

Figure 4 Heat flux (solid lines) and tube wall temperature (dashed lines) profiles along 3in OD boiler tubes with mass flux (lb/ft²·h) as parameter

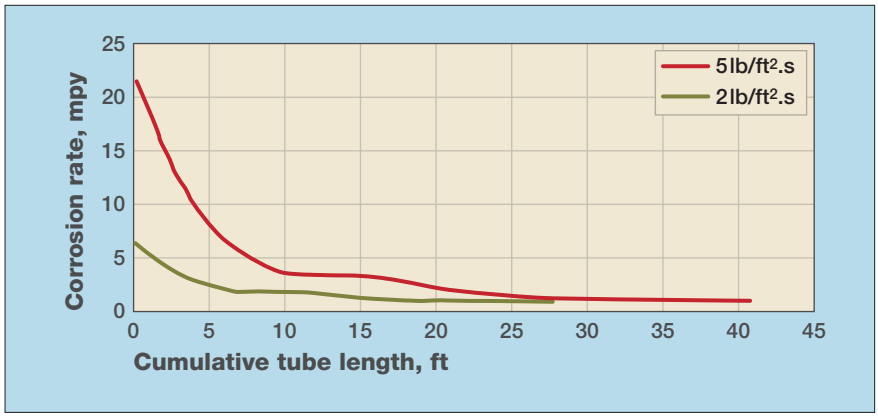

Figure 5 Sulphidic corrosion rates predicted at mass fluxes of 2 and 5 lb/ft²·h through 2in OD boiler tubes

Life cycle cost and economics

There are two ways that Claus WHBs cost the operator:

- Capital cost incurred when the plant is built: 'pay me now'
- Operating and maintenance costs that are incurred: 'pay me later'.

Capital cost is relatively straightforward to estimate. For the purpose of this article, the capital costs were calculated based on ratioed in-house budgetary equipment quotes, then applying an overall installation factor of five to place the estimates on a US Gulf Coast battery limits installed cost basis. Consideration of a steam drum was included in the cost estimate.

Normal operating and maintenance (O&M) costs that run day to day were assumed to even out across the various cases. The main distinguishing parameter that affects O&M costs is replacement frequency, and whether a planned or unplanned outage was taken. The replacement cost was estimated to be a new exchanger purchased in the future year plus a variable 'outage' cost component. If a particular hydrocarbon producing plant happens to be sulphur constrained, then an outage can result in quite significant lost profit opportunity based on an advantaged feedstock margin. In many cases, the O&M cost may be considerably less if, for example, only refractory work or retubing were conducted. The results here are intended to be illustrative, and it is the relative difference between the lifecycle costs that is important, not the absolute values.

Table 3 summarises the assumed cost parameters.

Assumed cost parameters	
Corrosion allowance, in	0.125
Production advantage, $/lt	1000
Outage duration, days	14
Sulphur production, lt/d	125 (design rate)
CEPCI basis, year	2016

Table 3

The case of 1.5in outside diameter

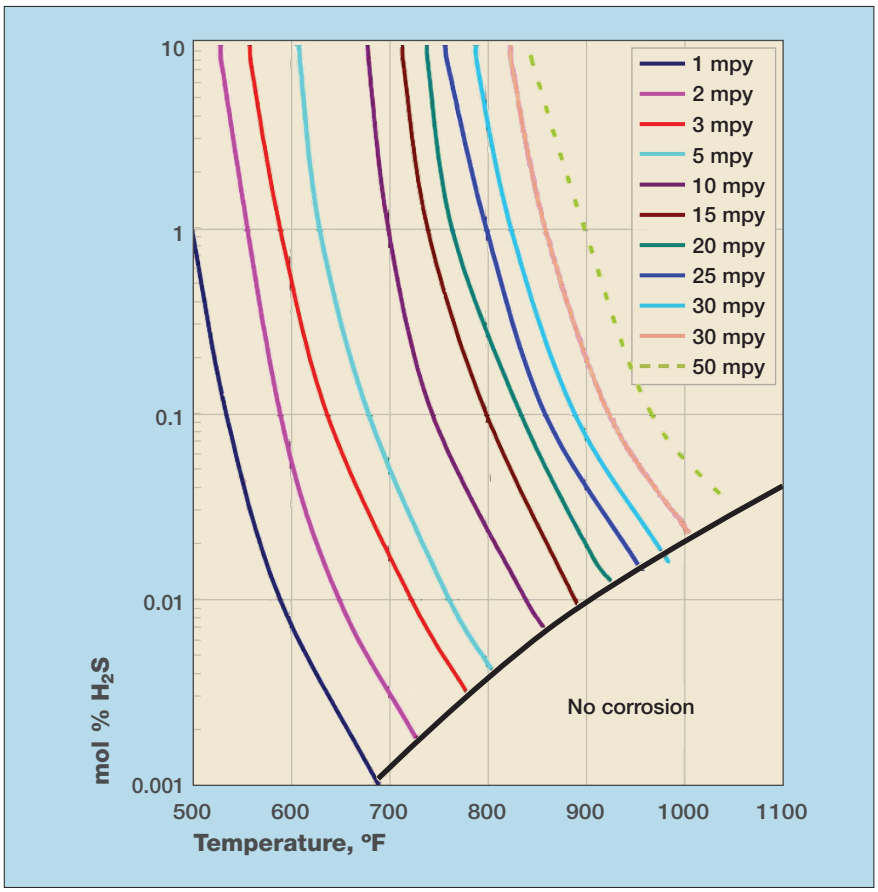

Figure 6 Couper-Gorman sulphidic corrosion curves for carbon steel

Annualised O&M relative costs ($) vs base case				
	2 lb/ft²·s	3 lb/ft²·s	4 lb/ft²·s	5 lb/ft²·s
1.5in OD	Base case	10 992	54 945	119 418
2in OD	26 467	50 591	100 243	203 692
3in OD	58 241	92 336	176 744	276 918

Table 4

Total installed cost (TIC) savings ($) vs base case				
	2 lb/ft²·s	3 lb/ft²·s	4 lb/ft²·s	5 lb/ft²·s
1.5in OD	Base case	93 962	131 038	142 055
2in OD	(226 934)	(164 145)	(152 986)	(162 824)
3in OD	(623 465)	(624 944)	(661 103)	(712 166)

Table 5

boiler tubes and a mass flux of 2 lb/ft2·s was arbitrarily selected as the base case for doing relative comparisons between various designs within the three tube size, four mass flux design matrix. The cost calculations included:

- Initial installed cost
- Annualised lost profit opportunity for downtime
- Equipment replacement cost
- O&M annualised cost
- O&M relative cost vs the base case
- TIC (total installed cost) savings vs the base case
- Payback period relative to the base case.

Table 4 shows the O&M cost vs the base case, and **Table 5** shows the TIC savings vs the base case.

At each tube size, as the mass flux increases, the initial installed cost decreases (see **Table 5**) because the surface area required with 1.5in tubes is the lowest of the three tube sizes. The replacement cost was assumed to be the cost of a new exchanger, so this also decreases with increasing mass flux. The annualised lost profit opportunity for downtime is directly related to the corrosion rate, and **Figure 5** shows that the corrosion rate increases with mass velocity and tube size which is directly connected to the service life of the exchanger. As the mass velocity through the exchanger increases, the lost profit opportunity from downtime increases because of higher corrosion rates. This directly affects the O&M annualised cost shown in **Table 4**.

Table 4 shows that as the mass velocity increases, the O&M cost increases; this is the result of higher corrosion rates, hence the shorter life cycle of the exchanger. **Table 5** shows that 1.5in tubes are the most economical choice based on TIC savings. As mass flux increases, TIC savings increase because tube cross-section is better utilised, so less material is required to manufacture the tube bundle. For 2in and 3in tube sizes, TIC savings are negative, meaning that these exchangers have higher capital cost.

So, is it preferable to 'pay me now' with a WHB design that has a higher capital cost, or to 'pay me later' with a design that has a higher O&M cost over time? In reality, the answer to this question is not straightforward – one must look at both the O&M cost and the TIC. An accurate simulation tool quantifies the effects of all aspects of WHB design, revealing right from the start what the full implications of various decisions will be.

There are many other factors that enter into the cost analysis; one of them is the number of exchanger passes. WHBs with a tube length greater than 35ft are typically built with two passes because of structural support and plot layout limitations. **Table 3** of Part 1 showed that half of the 2in tube cases and all of the 3in tube cases would probably require two passes. This influences both the initial installation cost as well as the O&M annualised cost

of the exchanger. Scaling cost for two-pass exchangers introduces a level of complexity in the cost analysis that was not explored for this article.

Another factor not fully explored is the pressure drop across the ferrules, although the 1.5in tube size appears to be the best choice, not only from an economic standpoint but also for hydrogen production and sulphur recovery. The ferrules in this size tube may cause high enough pressure drop to outweigh the other benefits.

Conclusions

The intelligent design of a cost effective WHB is quite challenging. There are many, often opposing factors that go into not only the performance and reliability of the exchanger, but the economics as well. If a WHB is designed without proper consideration of all the factors, the design could fall flat in one or more aspects. The SulphurPro simulator correctly accounts for all the important factors.

It has been shown that WHBs designed with small tubes and low mass fluxes favour safe heat fluxes, the lowest tube wall temperatures, and the lowest sulphidic corrosion rate. Each of these favourably affects the lost profit opportunity from downtime. Additionally, as **Table 5** of Part 1 showed, small tubes and high mass fluxes favour sulphur recovery and hydrogen make. Considering all these competing factors, a balance must be struck – one that depends on the specific plant's economic objectives and its performance requirements.

References

1 Karan K, Mehrotra A K, Behie L A, Including radiative heat transfer and reaction quenching in modeling a Claus plant waste heat boiler, *Ind. Eng. Chem. Res.*, 33, 1994, 2651–2655.

2 Martens D H, Tube and tube weld corrosion and tube collapse, Brimstone-STS Sulphur Symposium, Vail, CO, 2011.

3 http://igs.nigc.ir/STANDS/IPS/e-tp-760.PDF

Nathan (Nate) A Hatcher is an Engineering Consultant with OGT. He holds a BS in chemical engineering from the University of Kansas.
Email: *Nathan.Hatcher@ogtrt.com*

Clayton E Jones joined Optimized Gas Treating, Inc as a Software Development Engineer in 2012. He holds a BS in chemical engineering from McNeese State University and a MS in chemical engineering from the University of New Mexico.

Simon A Weiland is Technical Applications Engineer with Optimized Gas. He holds a BS in chemical engineering from the University of Oklahoma.

Steven M Fulk is Technical Director with Optimized Gas Treating. He holds a BS in chemical engineering from Texas A&M University and a PhD in chemical engineering (2016) from the University of Texas at Austin.

Matt Bailey provides sales and marketing support with Optimized Gas Treating, Inc. He has over 10 years of industry experience in technical sales, creating safe engineered solutions for refineries, chemical p lants and engineering companies. He is a registered Engineer in Training with the Texas Board of Professional Engineers and holds a BS in chemical engineering from Texas A&M University and an MBA from the University of Houston.